Ratings
Voltage: 300 Vac
Temperature: 80 °C

Conductor
Gauge: 28 AWG, 0.089 mm²
Material: tinned copper strands
Strand size: Ø 0.127 mm
Strand count: 7
Max resistance at 20 °C: 239 Ω/km

Insulator
Material: PVC
Color: white, black
Outer diameter: 1.2 ±0.10 mm
Min resistance at 20 °C: 10 MΩ/km

Shield
Type: spiral
Material: tinned copper strands
Strand size: Ø 0.12 mm
Strand count: 54 ±2

Outer jacket
Material: TPU, 80 °C
Type: extruded, non-integral
Color: white
Diameter: 4.2 ±0.20 mm

Wire marking: E339579 AWM STYLE 20549 80°C 300V VW-1 - - - C AWM I/II A 80°C 300V FT1 TENSILITY

Tests
Voltage test: 300 V
Spark test: 3.0 kV
Tensile strength: 1.05 kgf/mm²
After aging at 113 ±2 °C for 7 days:
Minimum tensile strength 70 % original
Minimum elongation 65 % original
Heat shock: 121 ±1 °C /1 hour, no observed degradation
Deformation: 121 ±1 °C /1 hour, ≤ 50 %
Cold bend: -10 ±1 °C /1 hour, no observed cracking
Flammability: FT1, VW-1
Dielectric test: 1500 V ac for 1 minute without breakdown

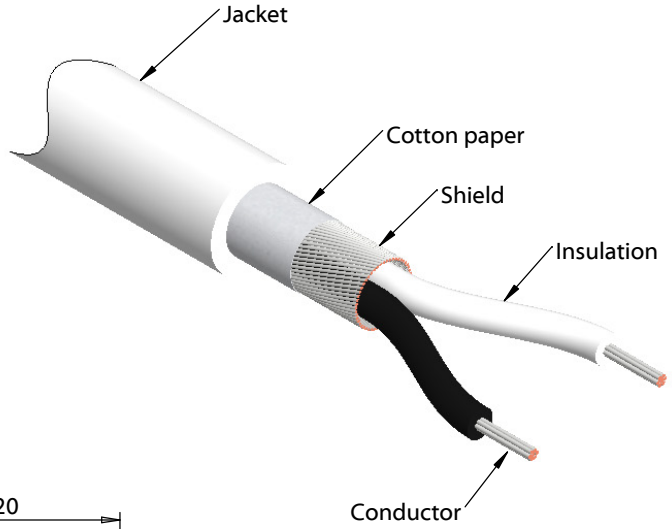

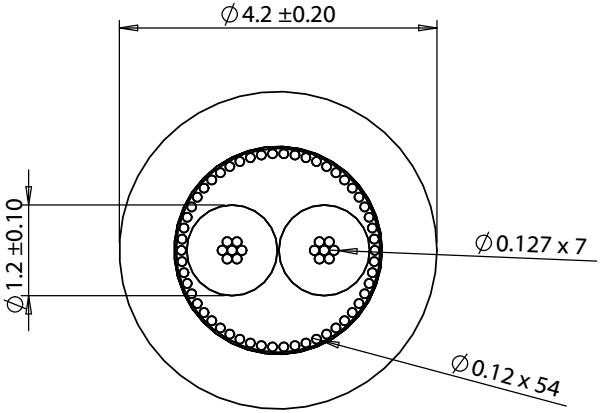

REVISION	DATE	DESCRIPTION
A	9/22/2015	Initial release

PREPARED: AG 2015.09.22 10:33:37 -07'00'

VERIFIED: LA Digitally signed by LA DN: cn=LA, o=Tensility International Corporation, ou=specs, email=luis.ala@tensility.com, c=US Date: 2015.09.23 13:45:19 -07'00'

DIMENSIONS ARE IN MILLIMETERS

TOLERANCES:
X: ± 0.5 mm
X.X: ± 0.3 mm
X.XX: ± 0.05 mm

NOTES
RoHS and REACH compliant

Function test: no open, no short circuit, no intermittent

Drawing in third angle projected

DESCRIPTION:
Wire, 2C TS, 28 AWG, UL20549, 300V, 80C, 4.2 mm, shielded, VW-1, TPU, white

TENSILITY
20802 Sockeye Place #130
Bend, OR 97701 USA
tel 541.323.3228 *fax* 541.323.4202
800 877.670.7118 www.tensility.com

SIZE	PART NUMBER
A	30-00595

SCALE: 10:1 | SHEET 1 OF 1

5 4 3 2 1