Ratings
Voltage: 300 V
Temperature: -25 ~ 80 °C
Flammability: VW-1

Conductor
Conductor count: 1
Gauge: 22 AWG 0.34 mm²
Material: tinned copper strands
Strand size: ∅0.16 x 17
Resistance at 20 °C: 59.4 Ω/km max

Insulator
Material: PVC
Color: white
Diameter: ∅1.65 ±0.10 mm
Nominal thickness: 0.42 mm
Resistance at 20 °C: 10 MΩ/km min

Shield
Type: spiral
Material: tinned copper strands
Stranding: ∅0.1 x 52
Coverage: 90% minimum

Outer jacket
Material: PVC
Color: clear
Diameter: ∅2.75 ±0.15 mm
Nominal thickness: 0.45 mm

Wire marking: E339579 UL AWM STYLE 1185 22 AWG 80°C 300V VW-1 - - - cUL AWM I A 80°C 300V FT1 TENSILITY

Tests
Insulation tensile strength: 2.11 kgf/mm²
Jacket tensile strength: 1.05 kgf/mm²
After aging at 113 ±2 °C for 7 days:
Minimum tensile strength 70 % original
Minimum elongation 65 % original
Heat shock: 121 ±1 °C /1 hour, no observed degradation
Deformation: 121 ±1 °C /1 hour, ≤ 50 %
Cold bend: -10 ±2 °C /1 hour, no observed cracking

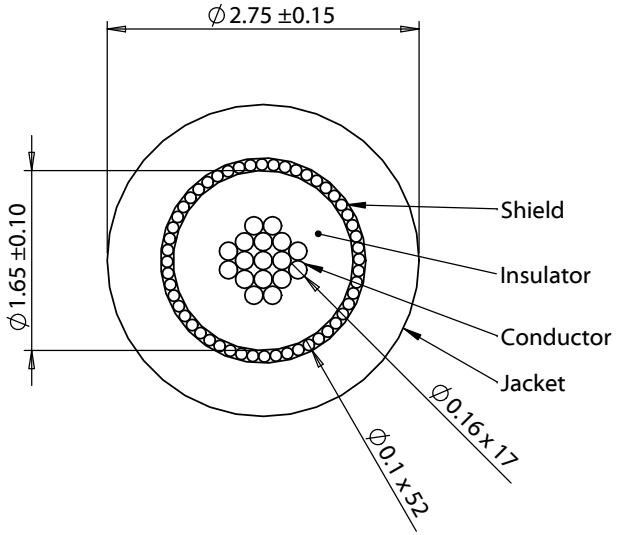

Revision:	Date:	Description:
A	08/25/2014	Initial release
A1	09/06/2018	Increased operating temperature range

Prepared: JP Digitally signed by JP Date: 2018.09.06 17:02:34 -07'00'

Verified: PS Digitally signed by PS Date: 2018.09.06 17:08:29 -07'00'

Dimensions are in millimeters.
Tolerances:
X: ± 0.5 mm
X.X: ± 0.3 mm
X.XX: ± 0.05 mm

Notes:
RoHS and REACH compliant

Function test: no open, no short circuit, no intermittent

Description:
Wire, 1C TS, 22 AWG, UL1185, 300V, 80C, 2.75 mm, shielded, VW-1, PVC, clear

TENSILITY
tel 1.541.323.3228 800 877.670.7118
fax 1.541.323.4202 web tensility.com

Size: A
Part number: 30-00343
Scale: 15:1
Sheet 1 of 1

To see a custom version of this cable assembly, call Tensility at 541-323-3228 or email engineering@tensility.com

5 4 3 2 1