ITEM NO.	PART NUMBER	DESCRIPTION	QTY.	COMPONENT NOTES
1	50-00979	Connector, 3 pin M12 A-code socket, 12xL22mm, gold plated, molding style, solder cup, IP67, shielded	1	
2	30-01570	Wire, 3C TS, 22 AWG, UL20387, 300V, 105C, 60C oil, UV, 5.6 mm, shielded, VW-1, PVC, 80A, black	1	
3	24-00349	Overmold, M12 plug and jack, 180°	1	PVC, black
4	Heat shrink	Heat shrink, black	1	covers drain
5	Heat shrink	Heat shrink, black	1	covers end of jacket

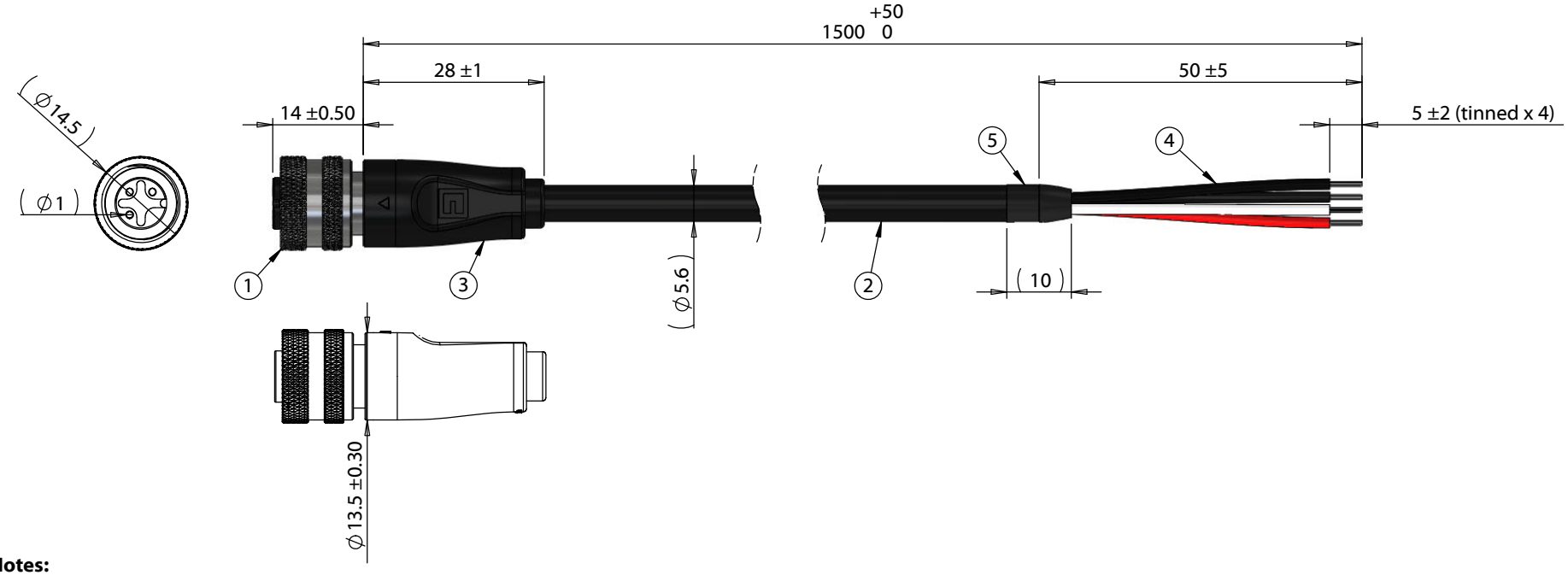

Notes:
Cable rated for 250 V, 4 A
Temperature: -40 ~ 105 °C
Oil resistant up to 60 °C
Water resistant up to 75 °C
UV resistant

IP67 waterproof rating when mated with corresponding (IP67) connector

Functionally equivalent components may be substituted

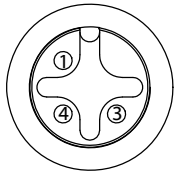

Front View
Not to Scale

Wiring Diagram	
50-00979	wire color
1	red
3	black
4	white
Shell	shield/drain

Revision:	Date:	Description:
A	10/15/2020	Initial release

Prepared: AG — Digitally signed by AG Date: 2020.10.15 14:17:51 -07'00'

Verified: AW — Digitally signed by AW Date: 2020.10.20 14:21:10 -07'00'

Dimensions are in millimeters.
Tolerances:
X: ± 0.5 mm
X.X: ± 0.3 mm
X.XX: ± 0.05 mm

Notes:

RoHS compliant

Function test: no open, no short circuit, no intermittent

Description:

Cable, 1500 mm, 1.0 mm 3C 50-00979 M12 socket to 5 mm tinned, 22 AWG, 30-01570 wire, shielded

TENSILITY
tel 1.541.323.3228 800 877.670.7118
fax 1.541.323.4202 web tensility.com

Size: A
Part number: 10-03801
Scale: 1:1
Sheet 1 of 1

5 4 3 2 1

To see a custom version of this cable assembly, call Tensility at 541-323-3228 or email engineering@tensility.com